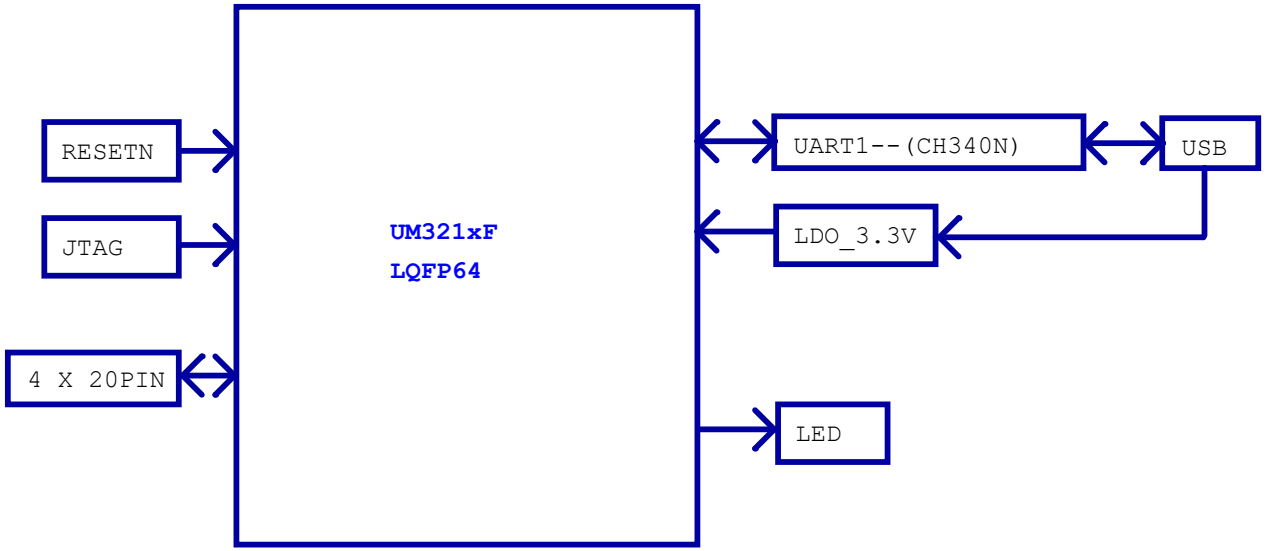

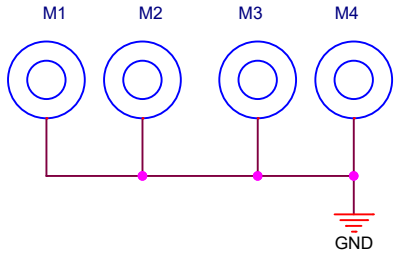

Unicmicro(Guangzhou)Co.,Ltd.			
Project:	UM321XF_EVB_V01_20220729		
Page:	01. BLOCK DIAGRAM		
Date:	Thursday, January 12, 2023	Rev:	V01
Designed by:	CIMI	Sheet:	1 of 3

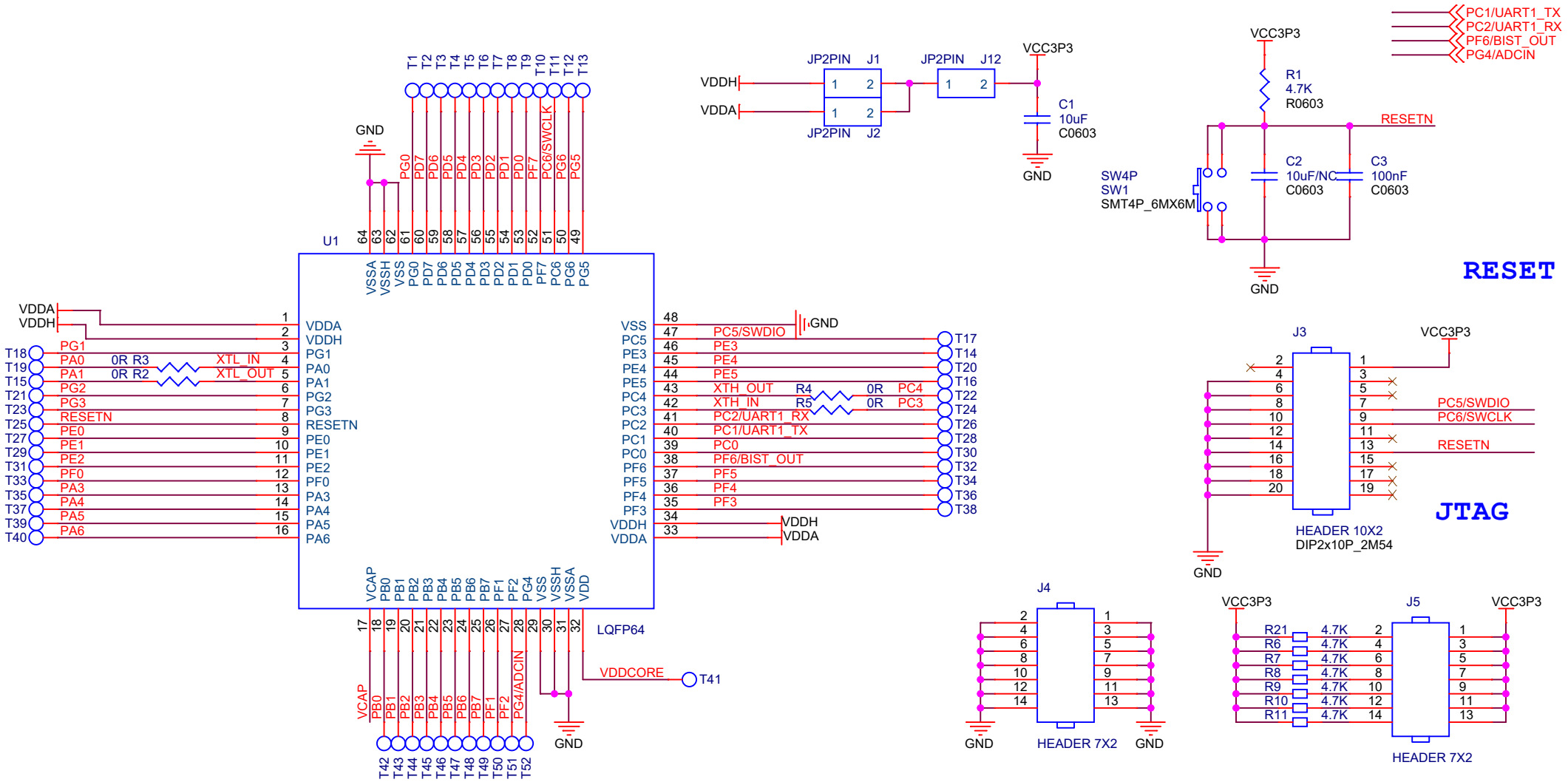

Unicmicro(Guangzhou)Co.,Ltd.	
Project:	UM321XF_EVB_V01_20220729
Page:	02. MCU
Date: Thursday, January 12, 2023	Rev: V01
Designed by: CIMI	Sheet: 2 of 3

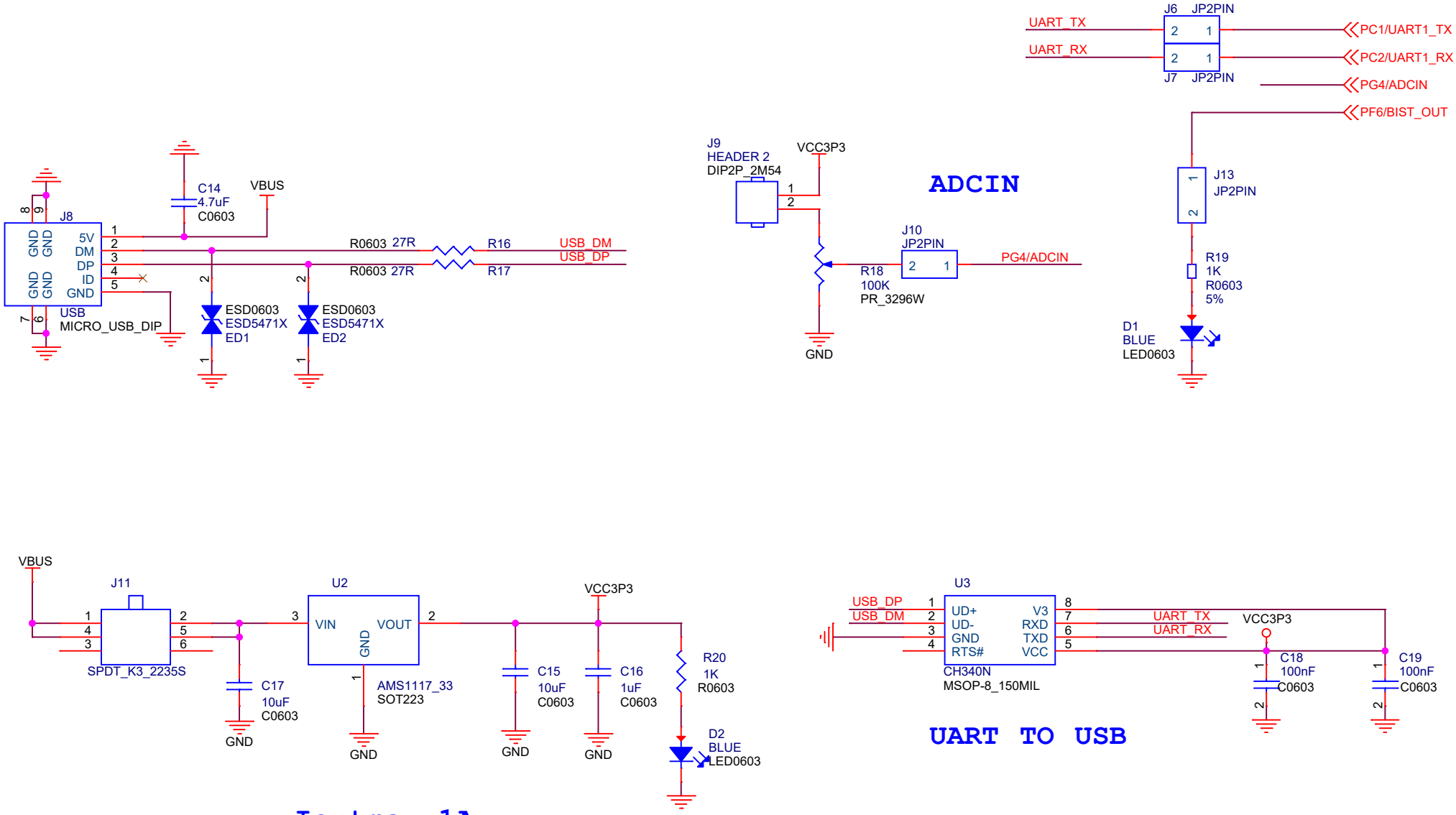

Unicmicro(Guangzhou)Co.,Ltd.			
Project:	UM321XF_EVB_V01_20220729		
Page:	03. USB TO UART		
Date:	Thursday, January 12, 2023	Rev:	V01
Designed by:	CIMI	Sheet:	3 of 3