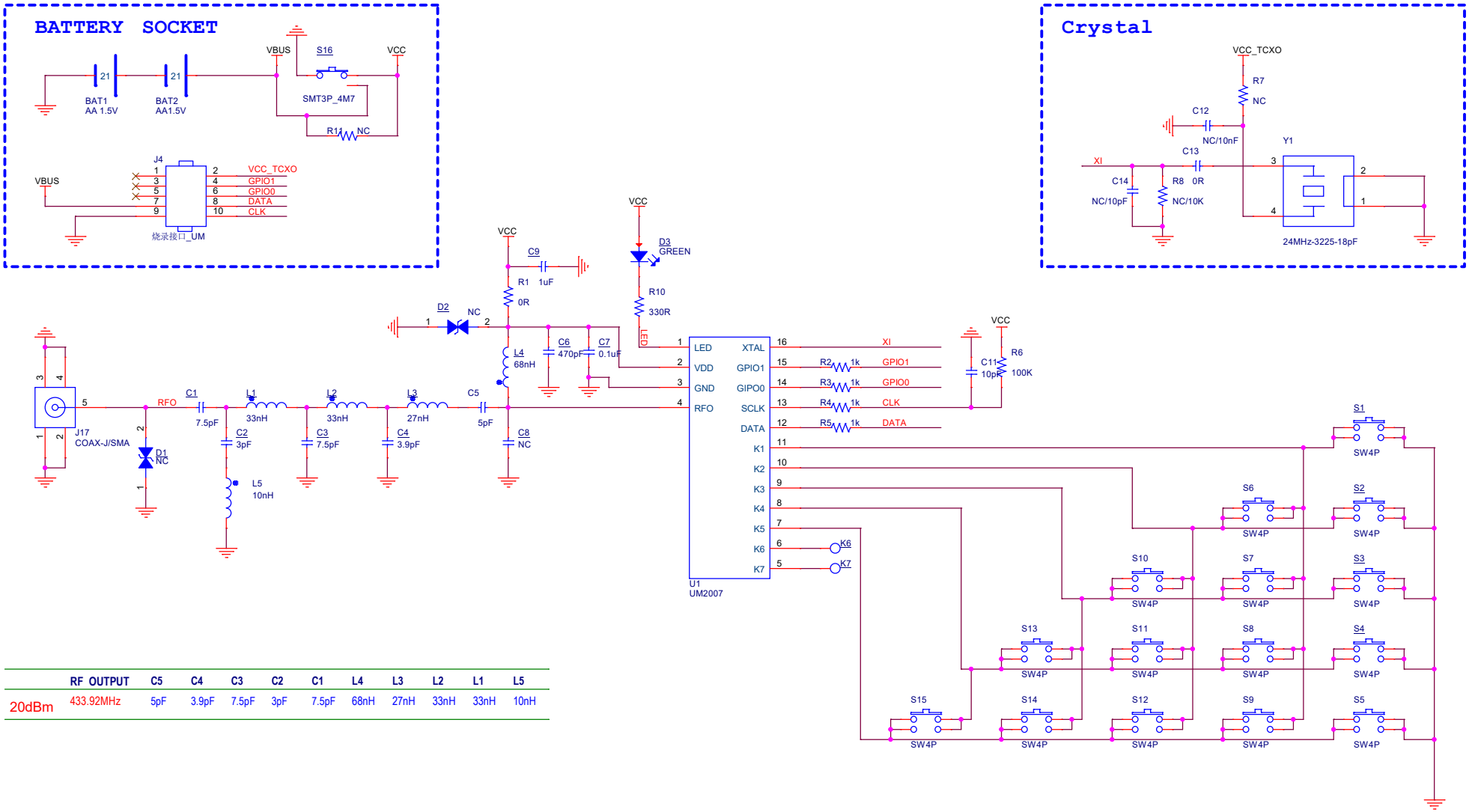

	RF OUTPUT	C5	C4	C3	C2	C1	L4	L3	L2	L1	L5
20dBm	433.92MHz	5pF	3.9pF	7.5pF	3pF	7.5pF	68nH	27nH	33nH	33nH	10nH

Unicmicro(Guangzhou)Co.,Ltd.			
Project:	UM2007_EVB_V01		
Page:	UM2007_SCH		
Date:	Friday, May 19, 2023	Rev:	V01
Designed by:	Franklin	Sheet:	1 of 1