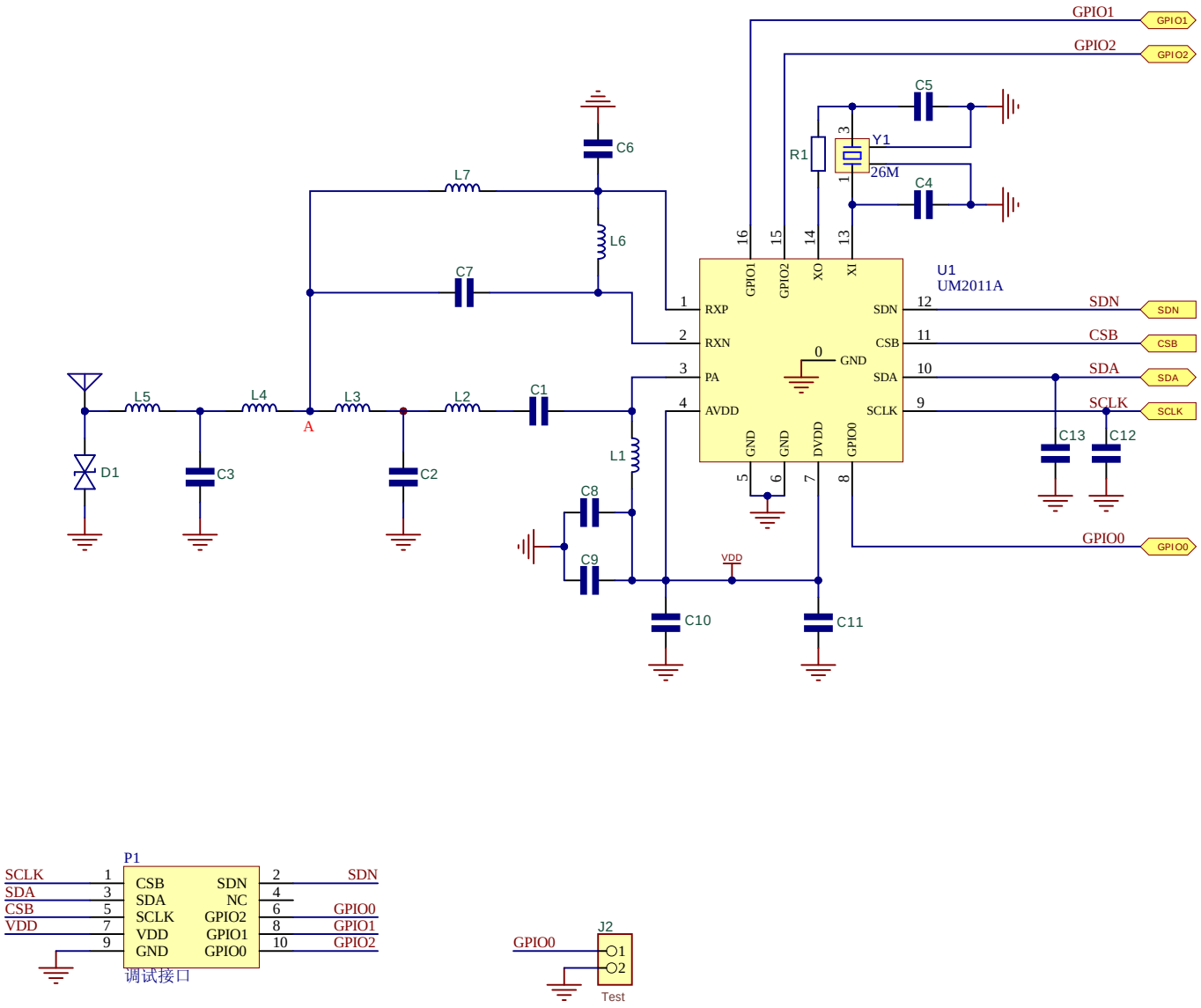

UM2011A_EVB_V1.0

V1.0

Comment	Description	Designator	Footprint	LibRef	Quantity